INDUVACOL SAS
INDUSTRIAL VALVULAS DE COLOMBIA S.A.S.

VÁLVULAS

VÁLVULA DE COMPUERTA DE ACERO CARBONO CLASE 800
Normas ASTM A-105 Clase B y ANSI B1.20.1

COMPUERTA DE ACERO CARBONO

DIÁMETRO NOMINAL												
PASO REDUCIDO		mm	8(1/4)	10(3/8)	15(1/2)	20(3/4)	25(1)	32(1-1/4)	40(1-1/2)	50(2)	65(2-1/2)	80(3)
		(INCH)										
PASO FULL		mm	-	-	10(3/8)	15(1/2)	20(3/4)	25(1)	32(1-1/4)	40(1-1/2)	50(2)	-
		(INCH)										
d		mm	7	7	10	13.6	18	24	29	36.8	46.5	51
l		mm	79	79	79	92	111	120	120	140	178	185
H(Abierto)		mm	166	166	166	169	193	230	246	283	330	359
W		mm	100	100	100	100	125	160	160	180	200	200
PESO	B.B.	kg	2.3	2.2	2.1	2.3	4.0	5.9	6.9	11.2	15.8	20
	W.B.	kg	1.9	1.8	1.7	2.1	3.7	5.2	6.2	10.4	14.8	-

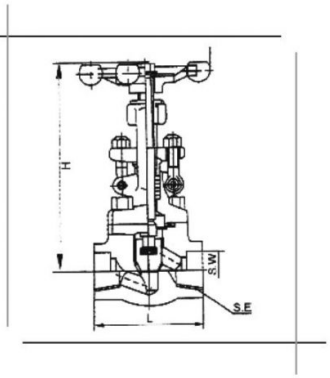

VÁLVULA GLOBO DE ACERO CARBONO CLASE 800
Normas ASTM A-105 Clase B y ANSI B1.20.1

GLOBO DE ACERO CARBONO

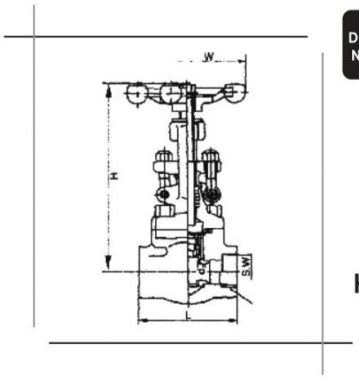

DIÁMETRO NOMINAL										
PASO REDUCIDO		mm	8(1/4)	10(3/8)	15(1/2)	20(3/4)	25(1)	32(1-1/4)	40(1-1/2)	50(2)	-
		(INCH)									
PASO FULL		mm	-	-	10(3/8)	15(1/2)	20(3/4)	25(1)	32(1-1/4)	40(1-1/2)	50(2)
		(INCH)									
d		mm	8	10	10	13	17	23	30	37	46
l		mm	79	79	79	92	111	130	152	172	200
H(Abierto)		mm	176	176	176	176	212	230	254	294	327
W		mm	100	100	100	100	125	160	160	180	200
PESO	B.B.	kg	2.2	2.1	1.9	2.1	3.9	5.8	7.2	10.8	16
	W.B.	kg	1.9	1.8	1.7	2.1	3.7	5.2	6.2	10.4	14.8

VÁLVULAS DE COMPUERTA DE ACERO FORJADO CLASE 1500
Normas ASTM A-105 Clase B y ANSI B1.20.1

COMPUERTA DE ACERO CARBONO

DIÁMETRO NOMINAL									
	(INCH)	(1/4)	(3/8)	(1/2)	(3/4)	1	1-1/4	1-1/2	2
	mm	6	10	13	19	25	32	38	51
A	(INCH)	3.11	3.62	3.62	4.37	4.72	4.72	5.51	6.3
	mm	79	92	92	111	120	120	140	160
B	(INCH)	7	7	7.13	7.12	8.58	9.33	10.79	12.56
	mm	178	178	181	181	218	237	274	319
C	(INCH)	3.94	3.94	4.92	4.92	6.30	6.30	7.09	7.87
	mm	100	100	125	125	160	160	180	200
D	(INCH)	0.31	0.51	0.51	0.51	0.71	0.94	1.14	1.45
	mm	8	13	13	13	18	24	29	36.8
PESO	Libras	6.6	7.04	7.72	8.82	13.23	15.43	23.81	34.17
	kg	3	3.2	3.5	4	6	7	10.8	15.5

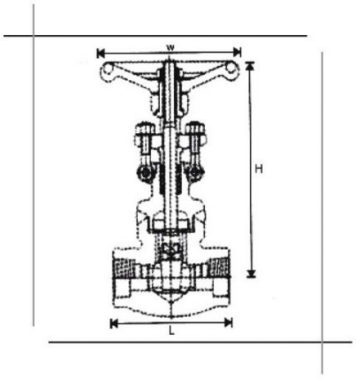

VÁLVULAS

INDUVACOL SAS
INDUSTRIAL VALVULAS DE COLOMBIA S.A.S.

VÁLVULAS DE GLOBO DE ACERO FORJADO CLASE 1500
Normas API 602 & ASME B16.34

DE GLOBO DE ACERO CARBONO

TAMAÑO	(INCH)	(1/4)	(3/8)	1/2	(3/4)	1	1-1/4	1-1/2	2
	mm	6	10	13	19	25	32	38	51
A	(INCH)	3.11	3.62	3.62	4.7	4.72	4.72	5.52	6.3
	mm	79	92	92	111	120	120	140	160
B	(INCH)	6.89	7	7.12	7.12	8.58	9.33	10.79	12.56
	mm	175	178	181	181	218	237	274	319
C	(INCH)	3.94	3.94	4.92	4.92	0.70	6.30	7.09	7.87
	mm	100	100	125	125	18	160	180	200
D	(INCH)	0.32	0.51	0.51	0.51	0.70	0.95	1.15	1.46
	mm	8	13	13	13	18	24	29	37
PESO	Libras	6.61	7.05	7.72	8.82	13.22	25.42	23.79	34.14
	Kilos	3	3.2	3.5	4	6	7	10.8	15.5

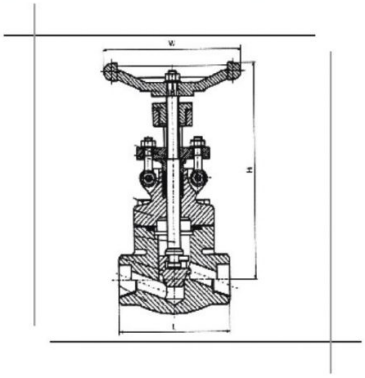

CHEQUES COMPUERTA DE ACERO ROSCADOS CLASE 800
Normas ASTM A-105 Clase B y ANSI B1.20.1

CHEQUES COMPUERTA ACERO ROSCADO

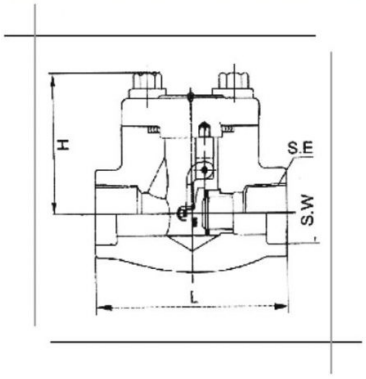

DIÁMETRO NOMINAL	mm (INCH)	8(1/4)	10(3/8)	15(1/2)	20(3/4)	25(1)	32(1-1/4)	40(1-1/2)	50(2)	-
d	mm (INCH)	-	-	10(3/8)	15(1/2)	20(3/4)	25(1)	32(1-1/4)	40(1-1/2)	50(2)
l	mm	7	7	10	13	17	23	30	37	46.5
h	mm	79	79	79	92	111	120	152	172	200
PESO	mm	61	61	61	61	78	84	103	118	132
	kg	1.5	1.5	1.5	1.5	2.3	3.9	5.6	8.9	12.5

CHEQUES GLOBO DE ACERO ROSCADOS CLASE 800
Normas ASTM A-105 Clase B y ANSI B1.20.1

CHEQUES GLOBO ACERO ROSCADOS

DIÁMETRO NOMINAL	mm (INCH)	8(1/4)	10(3/8)	15(1/2)	20(3/4)	25(1)	32(1-1/4)	40(1-1/2)	50(2)	-
d	mm (INCH)	-	-	10(3/8)	15(1/2)	20(3/4)	25(1)	32(1-1/4)	40(1-1/2)	50(2)
l	mm	7	7	10	13	17	23	30	37	46.5
h	mm	79	79	79	92	111	120	152	172	200
PESO	mm	61	61	61	61	78	84	103	118	132
	kg	1.5	1.2	1.4	1.4	2.3	3.9	5.6	8.9	12.5

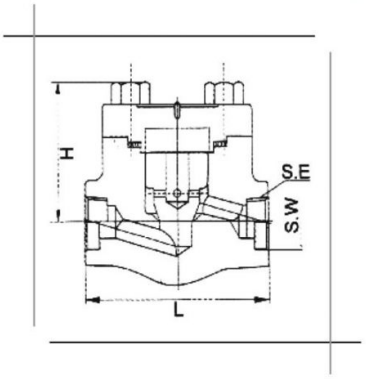

INDUVACOL SAS
INDUSTRIAL VALVULAS DE COLOMBIA S.A.S.

VÁLVULAS TIPO CHEQUE

Acero Carbón - Inoxidable y Aleaciones • Construcción según BS1868, ASME B16.34

	150		300		600			900			1500			2500	
DIÁMETRO NOMINAL	L R.F.	Peso (kg)	L R.F.	Peso (kg)	L R.F.	L R.T.J.	Peso (kg)	L R.F.	L R.T.J.	Peso (kg)	L R.F.	L R.T.J.	Peso (kg)	L R.F.	L R.T.J.
2"	8.0	14	10.50	20	11.5	11.62	29	14.5	14.62	65	14.55	14.62	65	17.75	17.87
2 1/2"	8.5	19	11.50	28	13.0	13.12	41	16.5	16.62	85	16.50	16.62	85	20.00	20.25
3"	9.5	24	12.50	35	14.0	14.12	52	15.0	15.12	105	18.50	18.62	129	22.75	23.00
4"	11.5	40	14.00	60	17.0	17.12	98	18.0	18.12	139	21.50	21.68	232	26.50	26.88
5"	13.0	55	15.75	80	20.0	20.12	159								
6"	14.0	71	17.50	115	22.0	22.12	219	24.0	24.12	350	27.75	28.0	490	36.00	36.50
8"	19.5	120	21.00	180	26.0	26.12	365	29.0	29.12	580	32.75	33.13	930	40.25	40.87
10"	24.5	170	24.50	290	31.0	31.12	545	33.0	33.12	810	39.00	39.38	1485	50.00	50.88
12"	27.5	255	28.00	410	33.0	33.12	760	38.0	38.12	1250	44.50	45.12	2100	56.00	56.88
14"	31.0	320	33.00	575	35.0	35.12	913	40.5	40.80	1680	49.50	50.25	3180	62.00	
16"	34.0	510	34.00	810	39.0	39.12	1290	44.5	44.80	2320	54.50	55.38	4380	68.00	
18"	38.5	621	38.50	925	43.0	43.12	1490	48.0	48.50	2950	60.50	61.40	5950	73.90	
20"	38.5	822	40.00	1250	47.0	47.25	1980	52.0	52.50	3820	65.50	66.40	7680	79.90	
24"	51.0	985	53.00	1780	55.0	55.38	3100	61.0	61.70	5120	76.50	77.60	8950	91.90	
26"	51.0	1350	53.00	2350	57.0	57.50	3720	65.0	65.90	6430	82.00		11975		
28"	57.0	1720	59.00	2620	63.0	63.50	4550	69.0	69.90	7620	87.50		13100		
30"	60.0	2120	62.75	3475	65.0	65.50	5410	73.0	73.90	8750	93.00		14950		

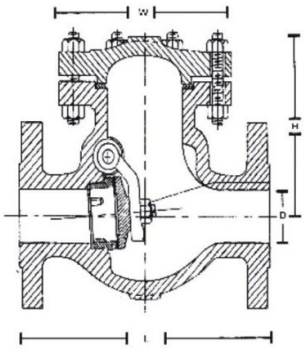

VÁLVULAS TIPO TRUNION

Acero Carbón - Inoxidable y Aleaciones • Construcción según API 6D

	150		300		600			900			1500			2500		
DIÁMETRO NOMINAL	L R.F.	Peso (kg)	L R.F.	Peso (kg)	L R.F.	L R.T.J.	Peso (kg)	L R.F.	L R.T.J.	Peso (kg)	L R.F.	L R.T.J.	Peso (kg)	L R.F.	L R.T.J.	Peso (kg)
2"	7.0	22	8.50	28	11.5	11.625	34	14.5	14.625	59	14.50	14.625	59	17.75	17.875	95
3"	8.0	34	11.30	47	14.0	14.125	66	15.0	15.125	85	18.50	18.625	115	22.75	23.000	210
4"	9.0	52	12.0	75	17.0	17.125	120	18.0	18.125	165	21.50	21.625	210	26.50	26.875	375
6"	15.5	160	15.88	205	22.0	22.125	275	24.0	24.125	385	27.75	28.000	490	36.00	36.500	835
8"	18.0	335	19.75	385	26.0	26.125	492	29.0	29.125	625	32.75	33.125	780	40.25	40.875	1430
10"	21.0	424	22.38	530	31.0	31.125	745	33.0	32.125	950	39.00	39.125	1560	50.00	50.875	2520
12"	24.0	585	25.5	780	33.0	33.125	1060	38.0	38.125	1280	44.50	45.125	1980	56.00	56.875	3460
14"	27.0	805	30.0	1025	35.0	35.125	1.250	40.5	40.875	1625	49.50	50.250	2780			
16"	30.0	1070	33.0	1415	39.0	39.125	1.680	44.5	44.875	1995	54.50	55.375	3890			
18"	34.0	1370	36.0	1685	43.0	43.125	2.180	48.0	48.500	2920	60.50	61.375	5380			
20"	36.0	1830	39.0	2140	47.0	47.250	2.780	52.0	52.500	3560	65.50	66.375	6240			
24"	42.0	2980	45.0	3420	55.0	55.375	4.835	61.0	61.750	5560	80.50	81.500	7380			
26"	45.0	3650	49.0	4340	57.0	57.500	5.830	65.0	66.000	7620						
28"	49.0	4380	53.0	4990	61.0	61.500	6.380	69.0	69.875	8450						
30"	51.0	5280	55.0	5890	65.0	65.500	7.450	74.0	74.875	10850						
32"	54.0	6225	60.0	7525	70.0	70.625	8.325	80.0	80.875	11830						
36"	60.0	8720	68.0	9460	82.0	82.625	11.460	90.0	91.125	16250						
40"	69.0	11730	77.0	12710	92.0	92.000	15.550									
42"	73.0	12970	82.0	14110	96.0	96.000	18.175									
48"	84.0	18170	85.44	19890	100.0	100.000	25.350									

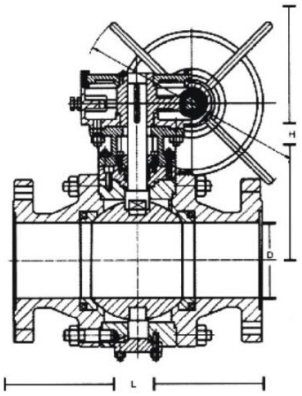

VÁLVULAS TIPO COMPUERTA

Acero Carbón - Inoxidable y Aleaciones • Construcción según API 600 & API 603, ASME B16.34

	150		300		600			900			1500			2500	
DIÁMETRO NOMINAL	L R.F.	Peso (kg)	L R.F.	Peso (kg)	L R.F.	L R.T.J.	Peso (kg)	L R.F.	L R.T.J.	Peso (kg)	L R.F.	L R.T.J.	Peso (kg)	L R.F.	L R.T.J.
2"	7.0	19	8.5	24	11.5	22.12	33	14.5	14.62	70	14.5	14.62	70	17.75	17.88
2 1/2"	7.5	25	9.5	35	13.0	13.12	47	16.5	16.62	95	16.5	16.62	110	20.00	20.25
3"	8.0	31	11.1	48	14.0	14.12	69	15.0	15.12	120	18.5	18.62	170	22.75	23.00
4"	9.0	46	12.0	70	17.0	17.12	122	18.0	18.12	148	21.5	21.68	245	26.50	26.88
5"	10.0	62	15.0	101	20.0										
6"	10.5	78	15.9	139	22.0	22.12	260	24.0	24.12	415	27.8	28.0	650	36.00	36.50
8"	11.5	130	16.5	207	26.0	26.12	420	29.0	29.12	650	32.8	33.13	995	40.25	40.88
10"	13.0	185	18.0	311	31.0	31.12	640	33.0	32.12	1.085	39.0	39.38	1850	50.00	50.88
12"	14.0	285	19.8	427	33.0	33.12	855	38.0	38.12	1.530	44.5	45.12	2650	56.00	56.88
14"	15.0	385	30.0	615	35.0	35.12	1.210	40.5	40.88	2.190	49.5	50.25	4050	62.00	
16"	16.0	540	33.0	915	39.0	39.12	1.485	44.5	44.88	2.880	54.5	55.38	5960	68.00	
18"	17.0	685	36.0	1.160	43.0	43.12	1.875	48.0	48.50	3.370	60.5	61.40	6890	74.00	
20"	18.0	855	39.0	1.595	47.0	47.25	2.670	52.0	52.48	4.350	65.5	66.40	8200	80.00	
24"	20.0	1.185	45.0	2.270	55.0	55.38	3.830	61.0	61.73	5.930	76.5	77.60	9750	92.00	
26"	22.0	1.420	49.0	2.895	57.0	57.50	4.610	65.0		7.100	82.0		15550		
28"	24.0	1.850	53.0	3.370	61.0	61.50	5.600	70.0		8.445	87.5		16950		
30"	24.0	2.380	55.0	3.786	65.0	65.50	6.350	74.0		9.680	93.0		19250		

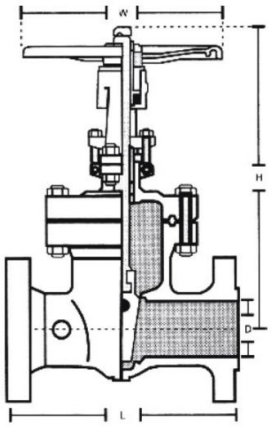

VÁLVULAS TIPO GLOBO

Acero Carbón - Inoxidable y Aleaciones • Construcción según Bs1873. ASME B16.34

	150		300		600			900			1500			2500	
DIÁMETRO NOMINAL	L R.F.	Peso (kg)	L R.F.	Peso (kg)	L R.F.	L R.T.J.	Peso (kg)	L R.F.	L R.T.J.	Peso (kg)	L R.F.	L R.T.J.	Peso (kg)	L R.F.	L R.T.J.
2"	8.0	21	10.50	27	11.5	11.62	38	14.5	14.62	90	14.5	14.62	95	17.8	17.88
2 1/2"	8.5	27	11.50	38	13.0	13.12	51	16.5	16.62	118	16.5	16.62	145	20.0	20.25
3"	9.5	36	12.50	52	14.0	14.12	72	15.0	15.12	131	18.5	18.62	230	22.8	23.00
4"	11.5	52	14.00	74	17.0	17.12	142	18.0	18.12	218	21.5	21.68	330	26.5	26.88
5"	14.0	71	15.75	115											
6"	16.0	92	17.50	148	22.0	22.12	295	24.0	24.12	482	27.8	28.0	780	36.0	36.50
8"	19.5	152	22.00	260	26.0	26.12	505	29.0	29.12	725	32.8	33.13	1100	40.3	40.88
10"	24.5	248	24.50	440	31.0	31.12	920	33.0	33.10	1100	39.0	39.38	2100	50.0	50.90
12"	27.5	476	28.00	728	33.0	33.12	1290	38.0	38.10	1450	44.5	45.10	2930		
14"	31.0	620	33.00	1100	35.0	35.12	1550	40.5	40.90	2320					
16"	36.0	880	34.00	1550	39.0	39.12	1960	44.5	44.90	3210					
18"	38.5	1350	38.50	2320	43.0	43.12	3050								
20"	38.5	1850	40.00	3100											
24"	51.0	2950													

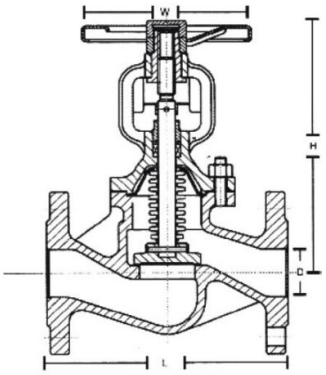

VÁLVULAS BOLA TIPO FLOTANTE

Acero Carbón - Inoxidable y Aleaciones Construcción Según API 608

	150		300		600	
DIÁMETRO NOMINAL	L R.F.	Peso (kg)	L R.F.	Peso (kg)	L R.F.	Peso (kg)
2"	7.00	11.0	8.50	15.0	11.5	20.0
2 1/2"	7.52	15.0	9.49	26.0		
3"	8.00	20.0	11.12	33.0	14.0	43.0
4"	9.00	31.0	12.00	54.0	17.0	85.0
5"	14.02	51.0	15.00	85.0		
6"	15.50	78.0	15.88	118.0		
8"	18.00	120.0	19.75	220.0		
10"	21.00	195.0	22.38	410.0		
12"	24.00	310.0	25.50	540.0		

